博取众长 超越自我

Power, Reform your life

POWER MACHINE INTERNATIONAL

PT. POWER MACHINE INTERNATIONAL
Jl. Pluit Permai Raya No.17 RT.001/RW.004, Pluit, Penjaringan, Jakarta Utara 14450
Tlp: (021) 2267-4142 | (021) 2267-4006 | (021) 2267-4272
POWER Email : Powertradings@yahoo.com

博越公司愿以诚信与您共创未来

Power are willing to join you to create a better future.

Company Profile

Berdiri sejak tahun 2010, power adalah sebuah perusahaan spesialis untuk mesin memproses plastik seperti mesin blowing,mesin daur ulang, dan mesin proses plastik lainnya. Kami banyak menjual unit mesin kami dan menjaga hubungan baik dengan semua customer kami. Tetapi bukan hanya membatasi diri kami untuk mesin tertentu, di tahun 2017 power memulai memperluas ke bidang mesin proses besi, seperti mesin tekuk, mesin potong, mesin press, dan lainya. Kami sudah membangun pabrik mesin berat pertama di Indonesia yang berlokasi Belitung ,dan dalam beberapa bulan kedepan, pabrik ini akan menjadi pabrik utama kami.

Kami berusaha menyediakan produk kualitas terbaik dengan harga terbaik dan service yang terbaik serta memuaskan. Kami bersedia bergabung dengan Anda untuk membuat masa depan yang lebih baik.

POWER MACHINE INTERNATIONAL

Table of Content

25

Assorted Goods

Machine Blade, Plastic hot printing, Plastic injection, Die Head, Screw Barrel, Gearbox, etc.

23

Heat Press Machine

Transfer delicate pattern from the transfer film to the surface of products through one-time processing.

19

Plastic Cutting Machine

Plastic bags, Packaging bags, Zipper bags, Mailing bags, Bubble warp, etc.

17

Film Blowing Machine

LDPE mLLDPE LLDPE EVA HDPE $Caco_3$ etc.

15

Air Cooling Chiller

Acceerate product curing, greatly improve the plastic products surface and clarity.

13

Vertical Mixer

Suitable for mixing powder and granular materials.

10

Plastic Granulating Line

Recycling plastic waste, melting cutting it into uniform sized granules.

09

Friction Washing

Mainly used for washing plastic film & plastic flake after shredded.

07

Plastic Granulator Machine

Suitable for recycling any blow moulding plastic, like plastic bottle, plastic tube, plastic casing, plastic moulding, etc.

03

Single Shaft Shredding Machine

Suitable for shredding and recycling various plastic wastes.

POWER

Vision series

Single Shaft Shredding Machine

VISION series single shaft shredders are small to medium sized shredding machines, suitable for processing wide ranges of materials into uniformed particle size. The processing result can be sold as is, or be sent for further processing through additional equipment. Throughput range typically between 300kg/hr – 5000 kg/hr depending on the model, material type and application.

Typical applications include

- Plastics: Moulding, plastic lumps, plastic profiles, plastic films, etc.
- Timber/wood: wood pallets, wood waste, green waste, etc.
- Paper & cardboard: documents, production waste, packaging materials, etc.
- Copper cable: household cables, telecoms and industrial cables including S.W.A cables, etc.
- Aluminum: Used beverage cans (UBC's), Aluminum swarfs, aluminum cables, etc.
- Textiles: Carpets (Rolls & Tiles), Garments, etc.
- Foam: Production waste, etc.
- Others: Counterfeit items, Faulty goods, Out of date stocks, etc.

Vision 1200 Hard Faced Rotor

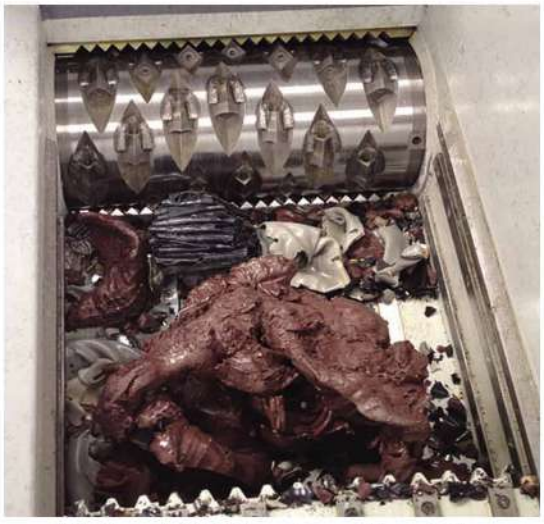

Vision 800 Purging Shredder

Specification

Vision Series

Model	V600	V800
Dimension L/W/H (mm)	1780 x 1292 x 1686	2665 x 1760 x 2087
Hopper inlet (mm)	790 x 600	1300 x 800
Discharge height (mm)	447	565
Ram (mm)	500	815
Rotation Diameter (mm)	Ø 220	Ø 400
Rotor Operation length (mm)	500	800
Rotation Speed (rpm)	80	80
Screen (mm)	Ø 40	Ø 40
Rotor Knives (Pcs)	23	35
Counter Knives (Pcs)	4	4
Drive Power (Kw)	18.5	37
Hydraulic Power (Kw)	1.5	2.2
Hopper Volume (L)	760	1500
Weight (Kg)	Approx. 1650	Approx. 3650

Model	V1000	V1200	V1500
Dimension L/W/H (mm)	2665 x 1960 x 2087	2665 x 2500 x 2087	2665 x 2805 x 2137
Hopper inlet (mm)	1300 x 1000	1300 x 1200	1300 x 1500
Discharge height (mm)	565	565	615
Ram (mm)	815	815	815
Rotation Diameter (mm)	Ø 400	Ø 400	Ø 400
Rotor Operation length (mm)	1000	1200	1500
Rotation Speed (rpm)	80	80	80
Screen (mm)	Ø 40	Ø 40	Ø 40
Rotor Knives (Pcs)	45	55	70
Counter Knives (Pcs)	4	6	6
Drive Power (Kw)	45	55	75
Hydraulic Power (Kw)	2.2	5.5	5.5
Hopper Volume (L)	1760	2030	2430
Weight (Kg)	Approx. 4250	Approx. 5050	Approx. 6300

Design and Features

Vision Series

Ram (3) Driven by Hydraulic System (5) pushes materials against Rotor (1) driven by Driving system (4) which also powering motor, pulley, belts and gearbox.
Rotor (1) is equipped with Rotor Knives (A) that screwed to the knif supports (B). This knives shred the material with an action against counter knives (C). The clearance between rotor knives and counte knives can be maintained by adjusting the support screws (D) on th counter knives.
The shredded particles will drop through the screen basket (2), the size of the particles is determined by the size of the holes on the screen basket (2).

1 Rotor

- Chevron Rotor Design.
- Rotor Knives manufactured from heat treate DC53 Steel – Can be rotated and used on fc edges before replacement.
- Long lasting Fixed Counter knive - Can be adjusted to maintain shredding clearance.
- Wear resistant coating – Optional for shredd abrasive materials e.g fiber glass.

2 Screen Basket

- Easy to change screen basket (size Ø 12~100mm). – For accurate size control.
- Safety limit switch installed to screen door tc prevent machine to run while the access doc is open.
- Cylinders access door installed on V800 to V1500 for easy access.
- Star Screen – (Optional) for thin and/or flexible material e.g Plastic films.

Bearing

- Big size, High Quality Spherical shaft bearings – Separated from cutting chamber to prevent shredded materials entering into grease seals.
- Bearing housing is integrally machined – warrant the long lasting use of the bearings.
- Rotor water cooling - Optional water cooling through bearing housing to the rotor.

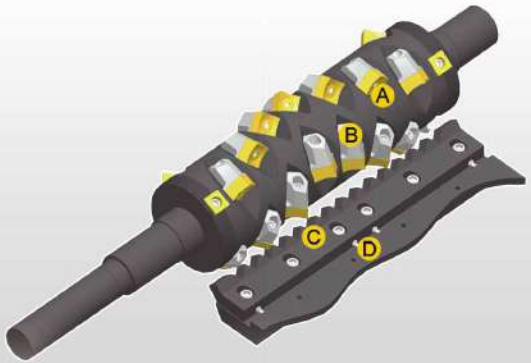

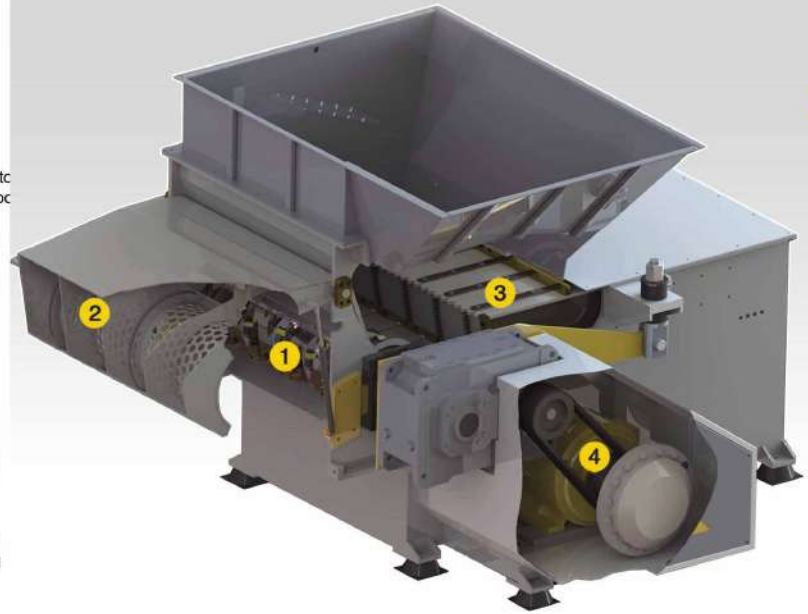

3 Ram

- Segmented shredding chamber floor with brass guides
- Machined one piece segmented floor
- Advanced adjustable sealing system for the pusher unit
- Fine discharge chute – to collect the dines during shredding to protect the hydraulic power pack

4 Driving system

- Electric drive motors – configured tor star/Delta starting, fluid coupling mounted on V1200 and V1500.
- Heavy duty, Reduction Gearbox – mounted directly on the rotor shaft.
- Shock Absorbing Gearbox mounting arrangement – reduces stress on drive components.

5 Hydraulic system

- Twin speed hydraulic – fast speed backward to maximize the shredding throughput.
- Integrated oil/air cooler – maintain the temperature for continuous operation.
- Cover insulator optional – for applications e.g Wood shredding to avoid explosion.

Control Panel.

- Standalone electrical control panel – Siemens PLC control system,
- Manual & Automatic Controls for Rotor Direction and Hydraulic Force Feeding Device
- "Intelligent program" – motor auto reverse when overload, stop when machine idles.

GD & GB *series*

Plastic Granulator Machine

- GD & GB Series are suitable for recycling any blow moulding plastic, like plastic bottle, plastic tube, plastic casing, plastic moulding, etc.
- GD & GB Series are adopted with the pre-positioning blades design that can be adjusted. adding more cutting angle and improve the cutting efficiency. Hence the granules are evenly cut and produce less plastic powder.
- GD & GB Series are double casted with 4 side hopper. The inner layer are made from stainless steel and the outer layer are made from thicker iron steel. this design can reduce most noise while the machine was running.
- Camber cooling is applied with granulator up from 30 HP. It helps to reduce the heat caused by granulating friction. It improves efficiency and maintains longer service-life.
- The motor is equipped with overload protector and power protection devices. Environmentally friendly with low electricity consumption and high durability.

GD Flat cutter saddle

- GD Flat cutter is suitable for recycling any blow molding plastic, like PET bottle, thin plastic tube, plastic casing etc.
- GD & GB Cutter saddle are tempered from 45# Steel High Carbon steel
- GD & GB Blades are tampered with high heat from CR12MOV steel.
- The blades are easy to remove and replaceable, the length positions are adjustable, adding more cutting angle. Hence increases granulating efficiency.

GB cutter saddle

- GD series are upgraded design that aimed at cutting bottles and barrels. The rotary blades and stationary blades space are designed as V-shaped angle. This design will directly sent crushed materials into the center of the rotary blade. Efficiently crush the material into uniformed small pieces.

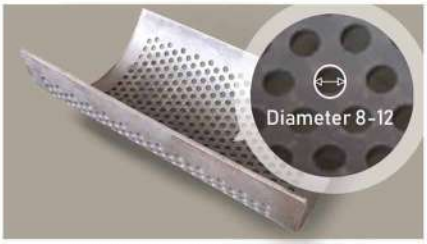

Customized SS Screen Mesh

- Customized mesh holes are available, and can be made according to client's demand.

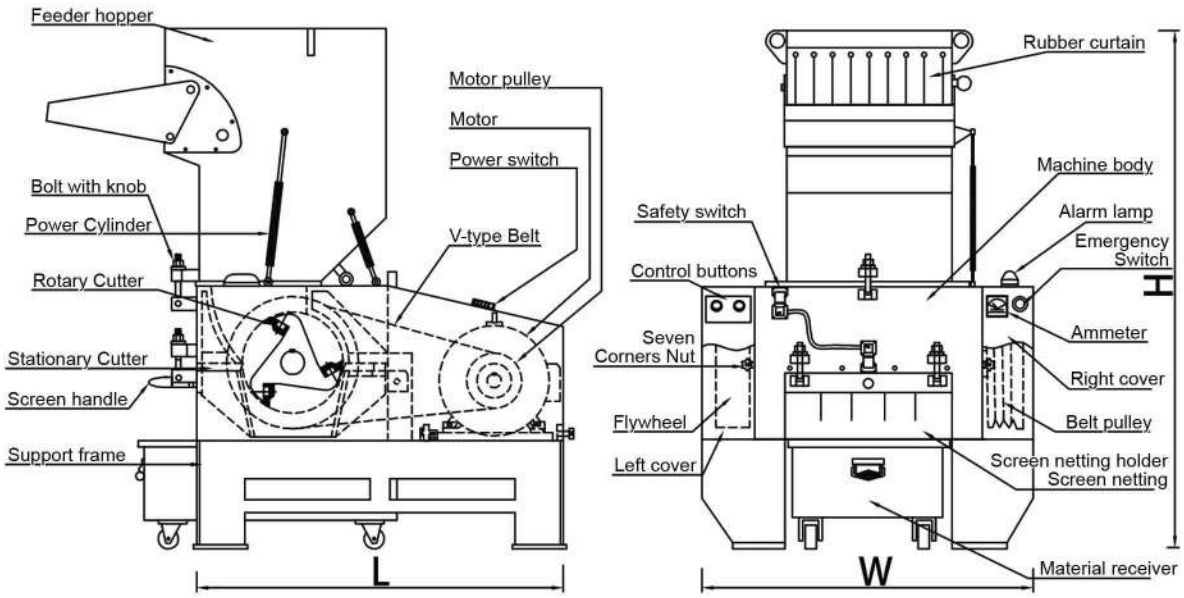

Specification

GD & GB Series

Model		PM-GD20HP	PM-GD30HP	PM-GD50HP	PM-GD75HP
		PM-GD20HP-SP	PM-GD30HP-SP	PM-GD50HP-SP	PM-GD75HP-SP
Grinding Chamber (mm)		480 x 330	660 x 350	720 x 500	910 x 820
Grinding Capacity (KG/H)		300 – 460	420 – 680	680 – 1000	700 – 1200
Stationary Cutter (pcs)		2	4	4	4
Rotary Cutter (pcs)		6	9	9	12
Mesh size (mm)		Ø 10	Ø 12	Ø 12	Ø 12
Power	Kw	15	22	37	55
	HP	20	30	50	75
Dimension L/W/H (mm)		1435 x 1075 x 1775	1635 x 1310 x 1965	2140 x 1520 x 2570	2590 x 2230 x 3610
Weight (Kg)		Approx. 1040	Approx. 1700	Approx. 2750	Approx. 5400
Dimension for SP (mm)		1600 x 1140 x 1960	1850 x 1400 x 2170	2250 x 1570 x 2880	2590 x 2230 x 3610
Collective Blower (Kw)		2.2	3	4	5.5
Weight for SP(Kg)		Approx. 1400	Approx. 22801	Approx. 3630	Approx. 5900

* "SP" Stands for soundproof granulator with collecting device.

Model		PM-GB20HP	PM-GB30HP	PM-GB50HP	PM-GB75HP
Grinding Chamber (mm)		530 x 400	530 x 400	830 x 520	1100 x 520
Grinding Capacity (KG/H)		350 – 550	400 – 550	750 – 1080	800 – 1200
Stationary Cutter (pcs)		2	2	4	4
Rotary Cutter (pcs)		3	3	6	9
Mesh size (mm)		Ø 14	Ø 14	Ø 14	Ø 16
Power	Kw	15	22	37.5	55
	HP	20	30	50	75
Dimension L/W/H (mm)		1500 x 1200 x 1850	1500 x 1200 x 1850	2200 x 1660 x 2600	2200 x 1900 x 2700
Barrel size (mm)		Ø 330 x 490	Ø 330 x 490	Ø 420 x 780	Ø 420 * 980
Barrel volume (L)		30	30	60	90

** Collecting device is optional and recommended.

POWER

SW Series

Turbo Washing Series

SW series mainly used for washing plastic film and plastic flake after shredded. The dirty material such as dirt, sands, feces etc. will be removed by the centrifugal force produced by the high-speed rotating of the main shaft. The blades in the main shaft used anti-wearing steel and easy to change.

The friction washer is made of a cylindrical trough with an inclined high speed running paddle screw to dewater and clean grounded material (film flakes, granules or similar material). The screw is fixed in the bearing housing by the means of two bearings and enclosed by a stainless steel screen. The ground material and water are fed from above at the lower end of the trough. Then the material is washed while being transported to the outlet at the top of the trough. Fines and water are thrown through the fine screen to the outside while the friction of the high-speed screw cleans the material. The drain is located at the lower end of the trough. The screen is automatically cleaned by means of a water-rinsing unit.

Specification

SW Series

Model	PM SW4030	PM SW5030
Dimension L/W/H (mm)	3600 x 3100 x 1000	2700 x 1100 x 3700
Speed (rpm)	1000	1000
Rotation Diameter (mm)	4000	500
Motor Power (Kw)	15	18.5
Weight (Kgs)	1200	1400

CT series

PET Flakes Granulation Production Line

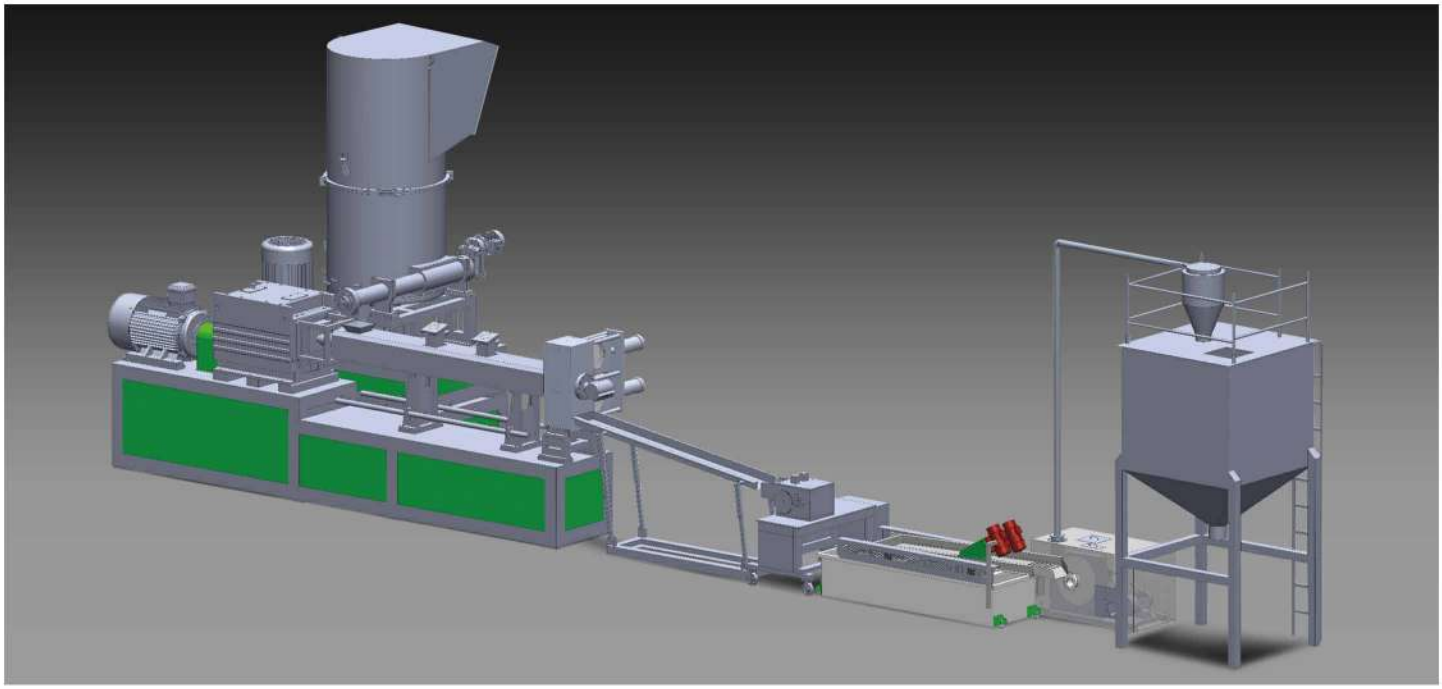

CT series are suitable for processing PET Flakes into uniformed small size granulates, This series does not require a complex pre-crystallization drying system to achieve the desired PET intrinsic viscosity control. The IV drop is very small, and chemical thickening can be achieved online with the addition of suitable additives.

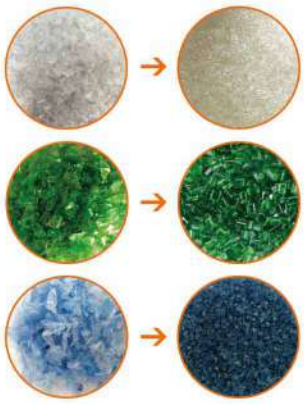

Specification

CT Series

Model	PM - CT6510	PM – CT7512	PM – CT9515
Suitable material	PET		
Output (Kg/H)	300	500	1000

GE series

Stand Cutting Plastic Granulating Extrusion Line

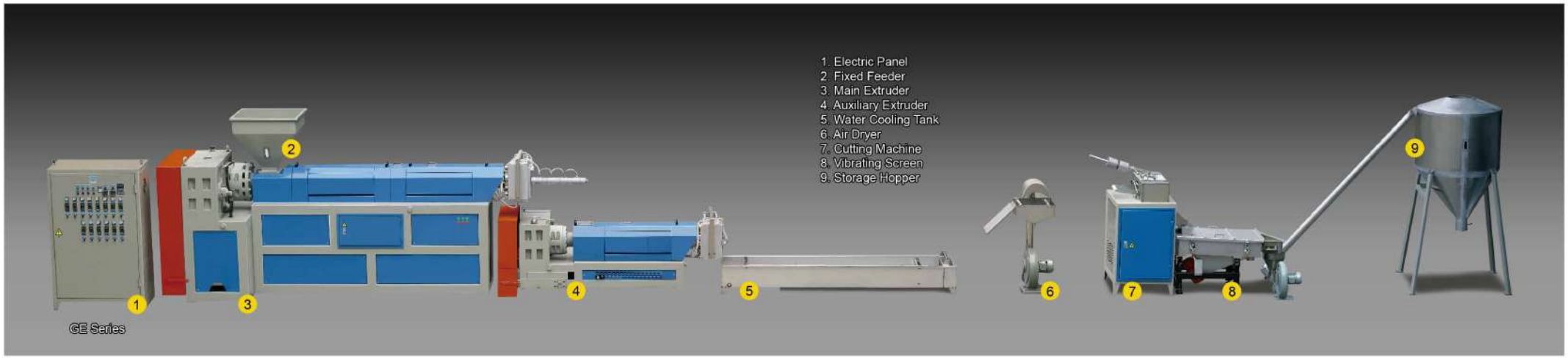

GE Series is Standing Cutting Plastic Granulating Extrusion Line with double exhausting plastic recycling unit. It's widely used for recycling Low Density Polyethylene (LDPE), High Polyethylene Polypropylene (PP), Polystyrene (PS) and ABS.

- The electric panel frame are designed can be open in back and front, temperature control are using RKC control from Japan, which is very accurate and easy to operate.
- The extruder hole are designed effectively for removing moisture and volatile water during material melting process, which makes granulates size uniform, dense, clear, and produce high output.
- The gearbox have the characteristic of stable running, advanced low noise, high bearing capacity, long durability assuring the main Extruders fit for continuing high speed operation.
- Equipped with double hydraulic mesh exchanging device, can be changed while the machine are running and easy to change.
- Cooling device (Air dryer), vibrating screen and storage hopper, easily separate and classifying granulates while cooling down, makes the palletizing processing automatically and convenient.

Specification

GE Series

	Model	PM-GE140/125-S	PM-GE140/140-S	PM-GE150/140-S
	Applicable Material	LDPE、HDPE、PP、PS、ABS		
Main Extruder	Screw Diameter (mm)	Ø 140	Ø 140	Ø 150
	Screw length to diameter ratio (L : D)	18 : 1	25 : 1	25 : 1
	Screw Barrel Material	38CrMoAlA – Quenching, tempering & Nitriding treatment		
	Gearbox Type	Low Noises Gearbox		
	Moto Power (Kw)	75 – 4	90 – 4	110 – 4
Auxiliary Extruder	Screw Diameter (mm)	Ø 125	Ø 140	Ø 140
	Screw length to diameter ratio (L : D)	12 : 1	12 : 1	12 : 1
	Screw Barrel Material	40 Cr, Quenching, tempering & Nitriding treatment		
	Gearbox Type	Low Noises Gearbox		
	Motor Power (Kw)	18.5 – 4	22 – 4	22 – 4
		Speed controlled by inverter		
Other Peripheral Equipment	Fixed Feeder	N/A	Yes	Yes
	Cooling means (m)	2.5	3	3.5
	Cutting Machine configuration	27 Alloy cutters, 5.5 kw Inverter		
	Vibrating Screen	Double layers screen 8 mm/2mm		
	Storage Hopper (Kg)	250	250	250

POWER

HL Series

Vertical Mixer

HL Series are suitable for mixing powder and granular materials. It is mainly used in mixing plastics industry also widely used in mixing materials used in industries such as powder, metallurgy, ceramics and etc. It has a simple design, easy to operate, easy to maintain and clean, fast and excellent performance in mixing materials.

- HL series mixer with vertical standing structure supported with modern design of casters, smaller but easier to move.
- Equipped cycloidal needle wheel type motor can keep lower noise and durable.
- The top cover and bottom are punching pressed with accurate design to expand the real life span and easy cleaning.
- The timers can auto-stops by the scale of 0-30 minutes

- The paddle has a scientific design to help shorten the mixing time
- The material can be stirred evenly, minimizing machine burden, thus saving time and electricity.
- Complete mixing fast, low energy consumption and high productivity result.
- Made using high quality 201 Stainless steel, high durability and easy to clean.

- High density high quality sealing ring is pressed into the edge of barrel, it's designed not easy to fall.
- With better sealing the string dust or powder won't easily leek outside.

- The cycloidal needle wheel type motor can lower noise level and preventing damage from vibration, machine more durable, maintenance is optional.

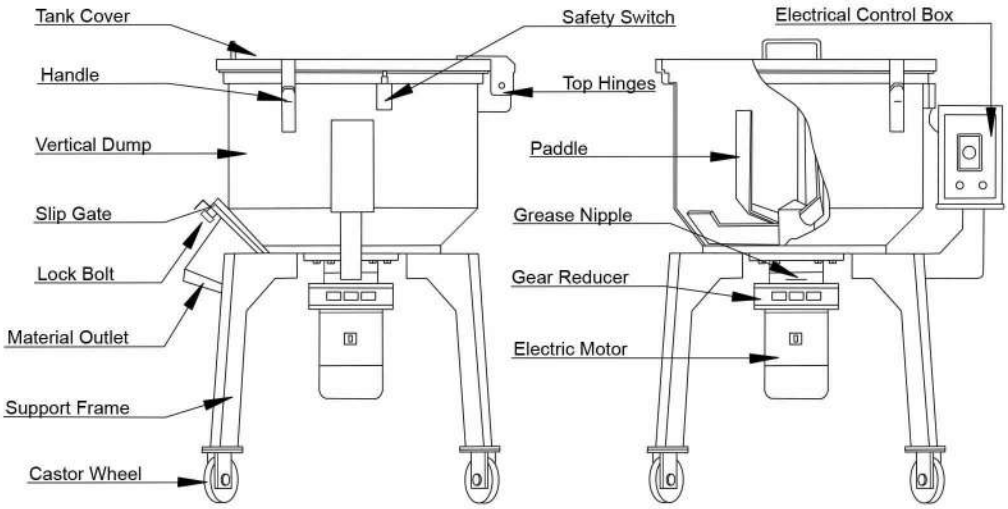

Specification

HL Series

Model		PM-HL100KG	PM-HL200KG
Power	Kw	3	7.5
	HP	4	10
Capacity (Kg)		100	200
Voltage (V)		380 3φ	380 3φ
Dimension L/W/H (mm)		1000 x 740 x 1250	1275 x 1000 x 1420
Weight (Kg)		Approx. 180	Approx. 313

POWER

LF series

Air Cooling Chiller

- LF Series air chiller used to provide a cooling process in plastic molding, shorten period of injection molding cycle.
- Helps accelerate product curing, greatly improve the plastic products surface and clarity, reduce marks from internal stress caused by slow curing, so that the product does not shrink nor deform and easy to demould.
- U.S imported Copeland compressor with new shell and tube evaporator rapidly cooling down temperature.

- LF series are adopted Siemens, and PLC controller can be switch between English or Chinese languages and easy to operate.
- could accurately control water temperature from PLC screen (between 3 ° C and 50 ° C);

- Iron die casted body provides large heat dissipation area and improving the cooling effect of the compressor.
- Lightweight Aluminum pistons reduce friction and vibration further reduce the noise during operation.
- Cutting edge electronic protection module, provides comprehensive motor protection for stability and durability.

- Adopting newest aviation technology, produced high pressure resistance, high temperature resistance and vibration resistance tube.
- This tube are designed to prevent leakage and forming layers of snow on the tube.
- Emerson filer made using 304 stainless steel further safeguard and filter the refrigerant and protect the compressor.

- Large number of finned copper tube sleeve and aluminum fins condenser with excellent thermal conductivity, increase heat dissipation area;
- With addition of low noise rotor fan accelerate heat dissipation speed.

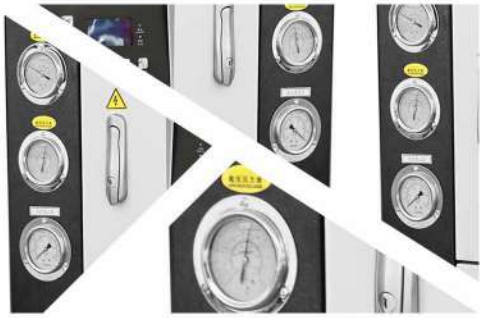

- Crystal display showing temperatures, provides visualized and direct setting easy for checking water pressure.
- Current overload protector, high and low pressure switches, electronic time delayer, fault display system-safe and durable.

Specification

LF Series

Model			PM-LF5A	PM-LF10A
Cooling Capacity	KW		14.5	35
	Kcal/h		15054	26714
Compressor	Input power (Kw)		4.5	4.5 x 2
	Rated Power (Hp)		5	5 x 2
Power			3PH-380V50Hz	3PH-380V50Hz
Evaporator	Type		Shell and Tube	
	Pipe diameter (inch)		1	2
Refrigerant	Type		R22	
	Quantity (Kg)		2	5
Cooling water flow			2.22	4.42
Condenser	Type		Finned copper tube + Low noise outer rotor fan	
	Fan Power (w)		160 x 2	460 x 2
Water tank capacity (Liter)			30	70
Water pump	Power	Kw	0.75	1.5
		Hp	1	2
	Distance (m)		35	15
	Flow Rate (L/min)		110	360
Safety protection			High and low pressure protection, Overload Protection, Over Temperature Protection, Phase Sequence Protection, etc.	
Dimensions L/W/H (mm)			1340 x 630 x 1046	1550 x 830 x 1508

Note: 1. Cooling capacity is calculated based on: inlet/outlet chilled fluid temperature 12°C/7°C, inlet/outlet cooling water temperature 30°C/35°C.
2. Working condition : Chilled fluid temperature from 5°C to 35°C. Inlet/outlet chilled fluid temperature difference from 3°C to 8°C.
Cooling water temperature from 18°C to 37°C, Inlet/outlet cooling water temperature difference from 3.5°C to 8°C.

POWER

SJ Series

Film Blowing Machine

Single Layer Co-Extrusion Film Blowing Machine

Single-layer film blowing machine and also professional high-speed co-extrusion film blowing machine. High speed film blowing machine is applied for blowing high-low density polyethylene. The product is widely used in composite film, packaging film, agricultural covering film, textile packing, garment bag or film packaging and other packaging areas. The main motor adopts inverter speed controller, which greatly increases the stability of main motor and can save 30% power.

Specification

SJ Series

Model	PM – SJ45 – 600	PM – SJ55 – 1000	PM – SJ65 – 1200	PM – SJ75 – 1600
Layer	Single Layer			
Suitable material	LDPE、mLLDPE、LLDPE、EVA、HDPE			
Film Thickness (mm)	LDPE : 0.02 – 0.15 HDPE : 0.01 – 0.08			
Max. Film width (mm)	500	900	1100	1500
Max. Output (Kg/hr)	80	120	180	230
Screw Diameter (mm)	Ø 45	Ø 55	Ø 65	Ø 75
Screw length to diameter ratio (L : D)	LDPE : 1 : 32 HDPE : 1 : 30			
Die head diameter (mm)	Ø 150 LD	Ø 200 LD	Ø 250 LD	Ø 350 LD
Air ring diameter (mm)	Ø 200	Ø 250	Ø 300	Ø 400
Driving motor power (Kw)	18.5	30	37	45
Traction type	Fixed type pneumatic traction			
Pulling speed (m/min)	5 – 60			
Coiling type	Single surface friction winder			
Total Power (Kw)	55	75	90	110
Dimension L/W/H (mm)	4500 x 2500 x 2500	4500 x 3000 x 4800	5000 x 3500 x 6500	8000 x 3500 x 6800

Double Layer Co-Extrusion Film Blowing Machine (A+B+A Type)

ABA double-layer co-extrusion blown film machine has a unique advantage in the production of HDPE, mLLDPE and LLDPE and $Caco_3$ materials. Through the multi-layer co-extrusion, the physical strength of the film is improved. The main motors supply Double-layer extrusion. One provides internal and external coating, while the other provides internal filled layer. It can reach the purpose of host configuration reduction, cost reduction, energy conservation and low consumption. Meanwhile, the internal filling layer can be added recycled material and calcium carbonate, whose proportion is more than 80% of total. The raw material cost in the process of production can be greatly reduced to provide clients with strong market competitiveness.

Specification

SJ Series

Model	PM – SJ45/45 – 1000	PM – SJ55/55 – 1200	PM – SJ65/65 – 1400
Layer	2 layers to 3 layers		
Suitable material	HDPE、mLLDPE、LLDPE、$Caco_3$		
Film Thickness (mm)	0.03 – 0.25		
Max. Film width (mm)	900	1100	1300
Max. Output (Kg/hr)	60	90	150
Screw Diameter (mm)	Ø 45	Ø 55	Ø 65
Screw length to diameter ratio (L : D)	1 : 30	1 : 30	1 : 30
Die head diameter (mm)	Ø 60	Ø 80	Ø 130
Air ring diameter (mm)	Ø 100	Ø 130	Ø 170
Driving motor power (Kw)	18.5 / 18.5	22 / 22	37 / 37
Traction type	Fixed type pneumatic traction		
Pulling speed (m/min)	5 – 100		
Coiling type	Single surface friction winder		
Dimension L/W/H (mm)	4500 x 3500 x 5600	4500 x 4000 x 5600	6000 x 3500 x 6500

Please contact our marketing for more machine models.

POWER

GZ series

Plastic Cutting Machine

High-speed Plastic Bag Thermal Cutting Machine

This Machine is specializing in the production of plastic bag. It designed to makes the sealing on the bottom especially durable. This machine adopts high precision Servo Motor to feeding, auxiliary feeding with Steam Pipe. It makes the film smoother, and can actives best feeding effect at high speed operation. This machine has auto stop system on film blocking and color printing inaccurate. All these functions reduce unnecessary waste in the production process. In the process of production if there is a mechanical failure problem, it can be corrected on the touch panel, saving time and convenient to solve the problem.

Specification

GZ Series

Model	PM GZ – 700	PM GZ – 800 / 350 x 2
Max. Cutting width (mm)	700	350 x 2
Max. Cutting Length (mm)	850	550
Film Thickness (mm)	0.08 – 0.25	
Production Speed (m/min)	About 100	
Machine Power (Kw)	12	13
Dimension L/W/H (mm)	6700 x 1360 x 1950	6700 x 1460 x 1950
Weight (Kg)	Approx. 2500	Approx. 2700

Model	PM GZ – 900 / 400 x 2	PM GZ – 1000 / 450 x 2
Max. Cutting width (mm)	400 x 2	150 x 2
Max. Cutting Length (mm)	600	650
Film Thickness (mm)	0.08 – 0.25	
Production Speed (m/min)	About 100	
Machine Power (Kw)	14	15
Dimension L/W/H (mm)	7000 x 1560 x 1950	7000 x 1660 x 1950
Weight (Kg)	Approx. 2900	Approx. 3200

Auto High Speed Continuous Dotting Machine

This equipment is specialized in the production of packaging bags and supermarket bag. It uses unstressing sealing, steam film feeding device, automatic paper feeding pipe and complete all actions using manipulator automatically.

Specification

SJ Series

Model	PM GZ – 450
Max. Cutting width (mm)	450
Max. Cutting Length (mm)	25 – 1250
Film Thickness (mm)	0.08 – 0.25
Production Speed (m/min)	About 100
Machine Power (Kw)	9
Dimension L/W/H (mm)	6300 x 1440 x 1780
Weight (Kg)	Approx. 1800

POWER

ZF & RQJ series

Plastic Cutting Machine

Auto Zipper Bag Making Machine

This machine is an advanced zipper bag making machine. Equipped with photoelectric tracking, computer control, servo motor feeding, frequency control, automatic temperature control, ultrasonic sealing. Has the advantages of simple operation, strong and beautiful sealing. This machine is dedicated to sealing and cutting high pressure PE Reclosable Zipper Bag.

Specification

ZF Series

Model	PM ZF – 500	PM ZF – 600	PM ZF – 700
Material		LDPE	
Max. Bag Width (mm)	10 – 450	10 – 550	10 – 650
Max. Bag Length (mm)	50 – 300	50 – 350	50 – 350
Production Speed (pcs/min)	50 – 120	50 – 120	50 – 120
Film Thickness (mm)	0.02 – 0.15	0.02 – 0.15	0.02 – 0.15
Diameter (mm)		Ø 650	
Machine Power (Kw)	5	7	8
Dimension L/W/H (mm)	4200 x 1550 x 1850	4200 x 1650 x 1850	4200 x 1750 x 1850
Weight (Kg)	Approx. 860	Approx. 1020	Approx. 1150

Microcomputer Auto Mailing Bag Cutting Machine

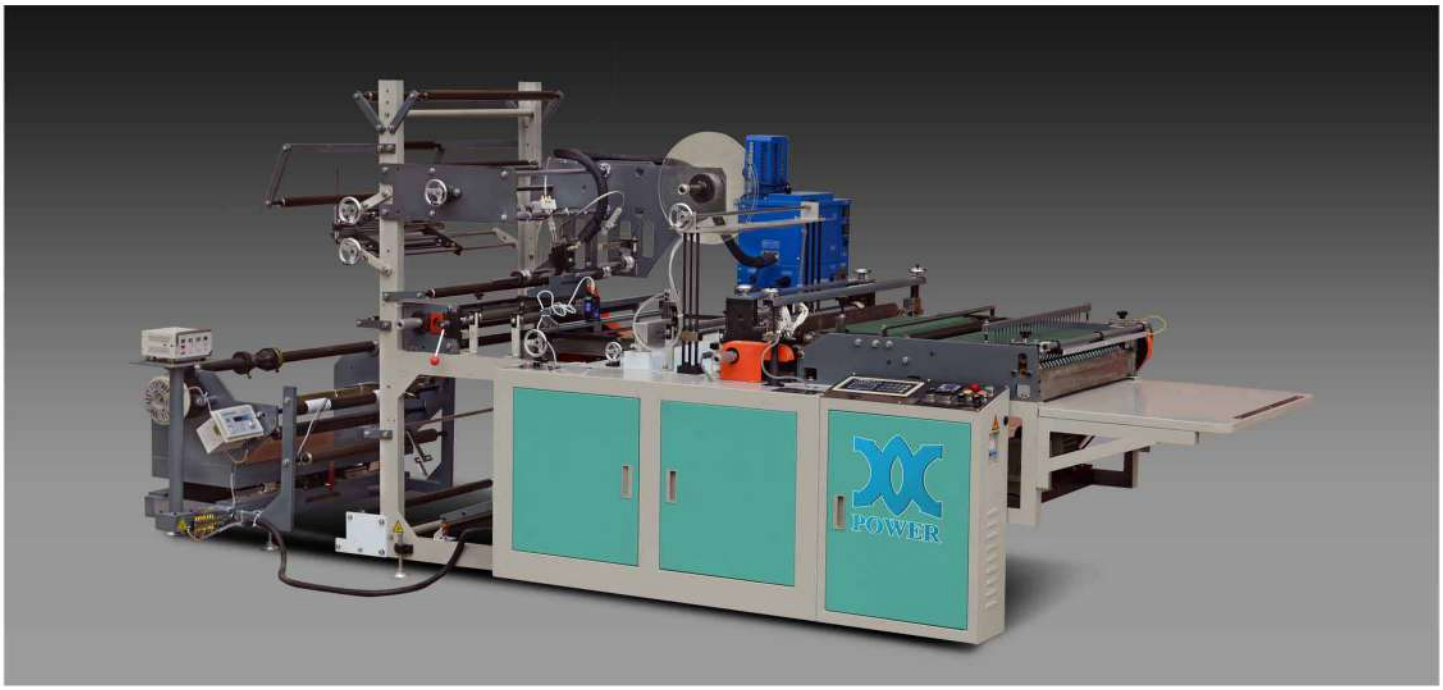

This equipment is specializing in the production of mailing bag. The machine is applied by Computer programming control system, which can cut edge, unfold the film, spray to crack bad glue, seal film, sending material, cut and count automatically. Unwinding part is equipped with rectifying and magnetic powder brake device. It's done at one time to reduce labor costs.

The machine is also equipped with touch-screen and imported high sensitivity tracking eye to track the color code, that will auto stop when Color code disappear. The conveyer are using servo motor it fast and stable. Intelligent temperature control system makes the bag opening fastness and flat. It's the most advanced equipment for making mailing bag at present.

Specification

RQJ Series

Model	PM RQJ – 700	PM RQJ – 800	PM RQJ – 1000
Max. Bag Width (mm)	60 – 690	80 – 750	100 – 950
Max. Bag Length (mm)	45 – 600	60 – 600	60 – 600
Production Speed (pcs/min)	30 – 200	40 – 180	20 – 160
Film Thickness (mm)	0.01 – 0.25		
Machine Power (Kw)	5	7	8
Voltage	AC 220V 50Hz		
Dimension L/W/H (mm)	3500 x 1350 x 1600	3500 x 1450 x 1600	3500 x 1550 x 1600
Weight (Kg)	Approx. 850	Approx. 1000	Approx. 1250

Please contact our marketing for more machine models.

POWER

HP series

Heat Press Machine

Heat press machine can transfer delicate pattern from the transfer film to the surface of the product through one-time processing (heating and pressing) of the machine. After the transfer the ink layer is integrated with the surface of the product, which is realistic and beautiful, greatly improving the grade of the product.

- HP 250 is the most recommend machine, It has the characteristics of high speed, high precision, accurate positioning, low energy consumption, automatic and flexible switching on flat or round surfaces, etc. it also can be used on wide variety of products.

- HP 300 is designed for large square surfaces like plastic box, plastic cases. It equipped with stand column that can be adjusted up and down this convenience for transferring different width products.

- HP 350 is designed for barrels or large cylinder products like oil barrels, paint buckets, etc. Installed with our own software this machine is more stable and flexible to operate. Suitable for high quality heat transfer film and produce high quality products.
- HP 400 is specially designed for oversized large cylinder products. Different from HP 350 this machine can transfer up to 600 mm diameter barrels or large cylinder products.

- HP 400 – 1000 is developed following market demand for heat transfer machine on larger surfaces. This model design is adopting original swing arm body in this industry, with this design this model have a long span of transferring ranges (can reach up to 1000 mm). It's also can work on flat or round surfaces.

- The machine is carefully assembled using a cast iron frame, seamless moving guides, and advanced electrical components (Japan OMRON PLC control, Panasonic drive motor, Japan AMC air valve, OMRON photo electric sensors, OMRON temperature controller, and French SCHAND electrical components). It has the characteristics of high speed, high precision, accurate positioning, and low energy consumption, suitable for high quality heat transferring.

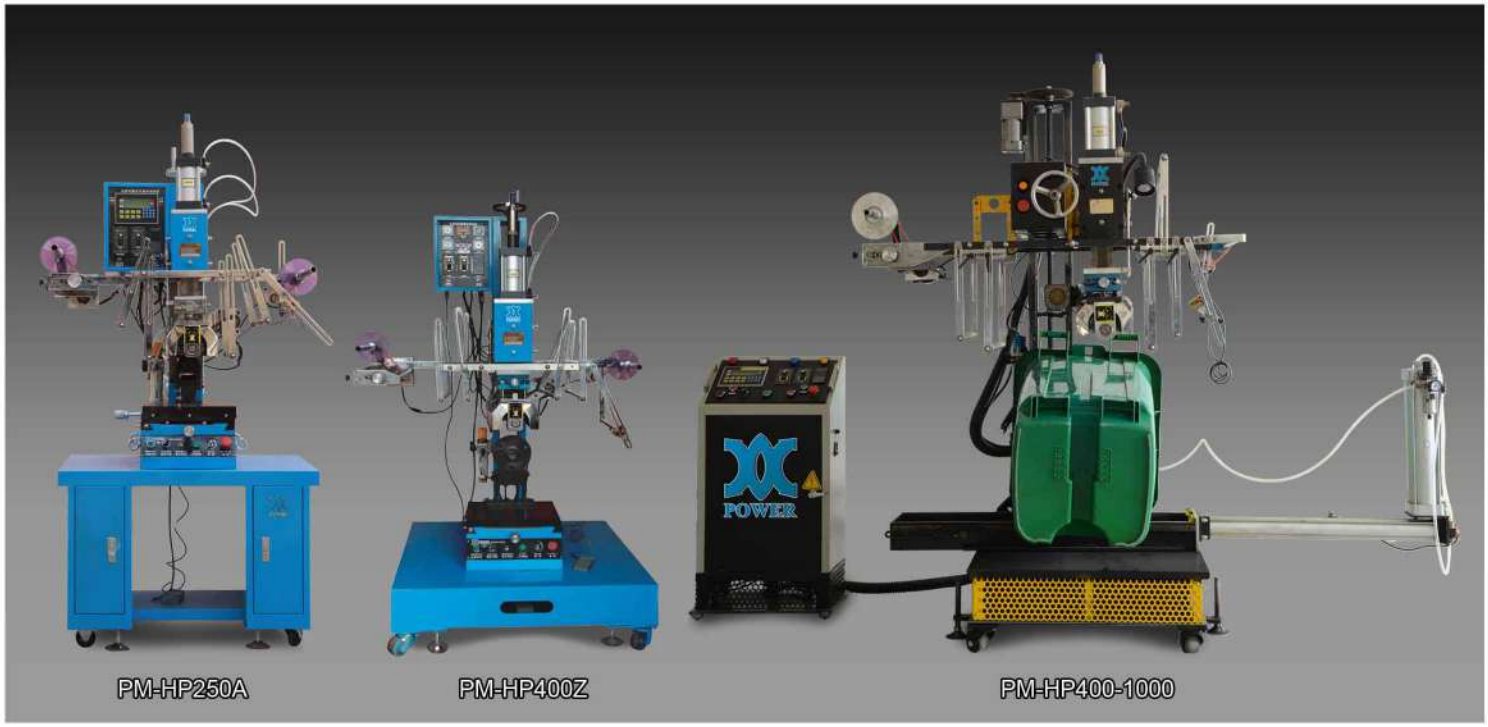

Specification

HP Series

Model	PM-HP350F	PM-HP350X	PM-HP400Z
Max. diameter to transfer (mm)	Ø 350	Ø 350	Ø 600
Transfer Max. Width (mm)	350	350	Ø 400
Max. transfer speed (pcs/min)	6	18	23
Machine control	PLC	Relay	PLC
Machine voltage	220 v 50 Hz	220 v 50 Hz	220 v 50 Hz
Machine pressure (mpa)	0.4 – 0.6	0.4 – 0.6	0.4 – 0.6
Heating power (Kw)	< 2.5	< 2.5	< 2.7
Dimension L/W/H (mm)	850 x 900 x 400	950 x 670 x 580	950 x 670 x 580
Weight (Kg)	Approx. 450	Approx. 320	Approx. 360

Model	PM-HP250A	PM-HP300Z	PM-HP400-1000
Max. diameter to transfer (mm)	Ø 300	Ø 650	Ø 1000
Transfer Max. Width (mm)	250	300	400
Max. transfer speed (pcs/min)	23	10	4
Max. transfer length (mm)	≤ 400	≤ 600	≤ 700
Machine control	Relay	PLC	PLC
Machine voltage	200 v 50 Hz	220 v 50 Hz	220 v 50 Hz
Machine pressure (mpa)	0.4 – 0.6	0.4 – 0.6	0.4 – 0.6
Heating power (Kw)	< 1.9	< 2.5	< 2.7
Dimension L/W/H (mm)	950 x 670 x 580	850 x 900 x 400	1500 x 1100 x 2100
Weight (Kg)	Approx. 350	Approx. 430	Approx. 800

Assorted Goods

Assorted Blades

We also providing Assorted Blades from cutting blade to rotor blade, from various sizes, and materials, we also can help you make your own custom nonstandard blade.

剪板机刀片
Shearing Machine Blade

切料机刀片
Cutting Machine Blade

粉碎机刀片
Crusher Blade

塑料切粒滚刀
Plastic Pelletizing Blade

粉碎爪刀片
Crushing Claw Blade

分条机刀片
Slitting machine blade

撕碎机刀片
Shredder Blade

螺旋粉碎刀
Spiral Crushing Blade

Plastic transprinting film

We can help you designing your own Plastic hot printing film and plastic injection film, we'll help you make your own design thus you can produce your unique products. We also provide stock design that also beautiful and suitable for many purpose.

热转印花纸膜
Plastic hot Printing

膜内贴膜
Plastic Injection

Gearbox

We have high quality gearboxes for Single or double screw extruder, these gearboxes are widely used in plastic, rubber and fiber extruders. Often use side by side with speed reducer.

PMZS 齿轮箱
PMZS Gearbox

PMZL 齿轮箱
PMZL Gearbox

Screw Barrel

Our screw barrel are made by high quality chrome planting with wear proof, corrosion proof, heat proof, high pressure proof and high speed proof. Suitable for various plastic materials such as PP, PE, ABS, LDPE, HDPE etc.

螺杆
Screw

螺杆筒
Screw Barrel

Various

We also provide various spare parts, such as Blowing machine Die head, Blowing machine Air-ring, Pelletizer Die head, Aluminum Mesh, Gear case, etc. please contact our marketing for more information.

模头
Die Head

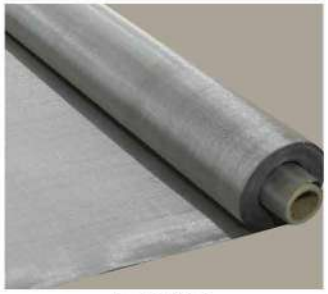

铝钢筛网
Aluminium Mesh